AI Accelerator Program

Analytics Vidhya

A Guide to Word Embeddings

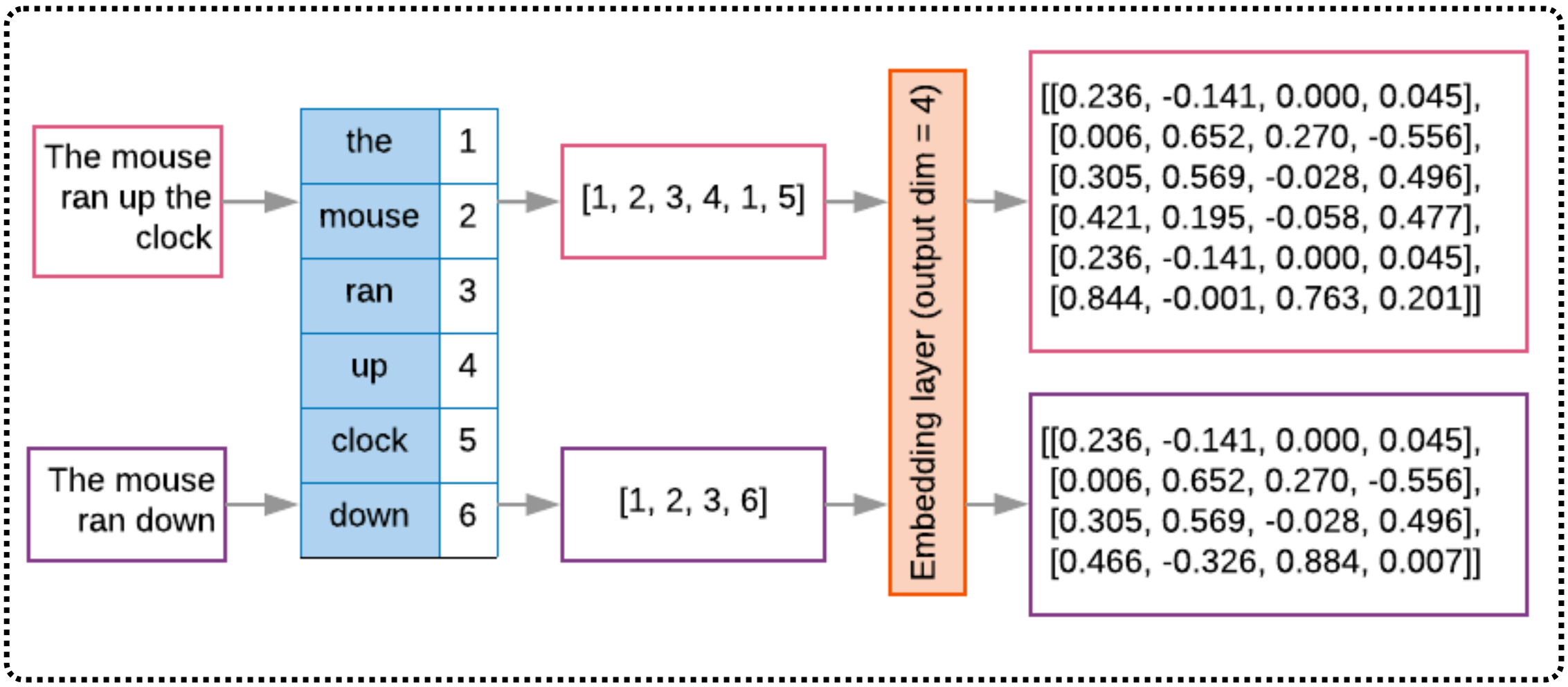

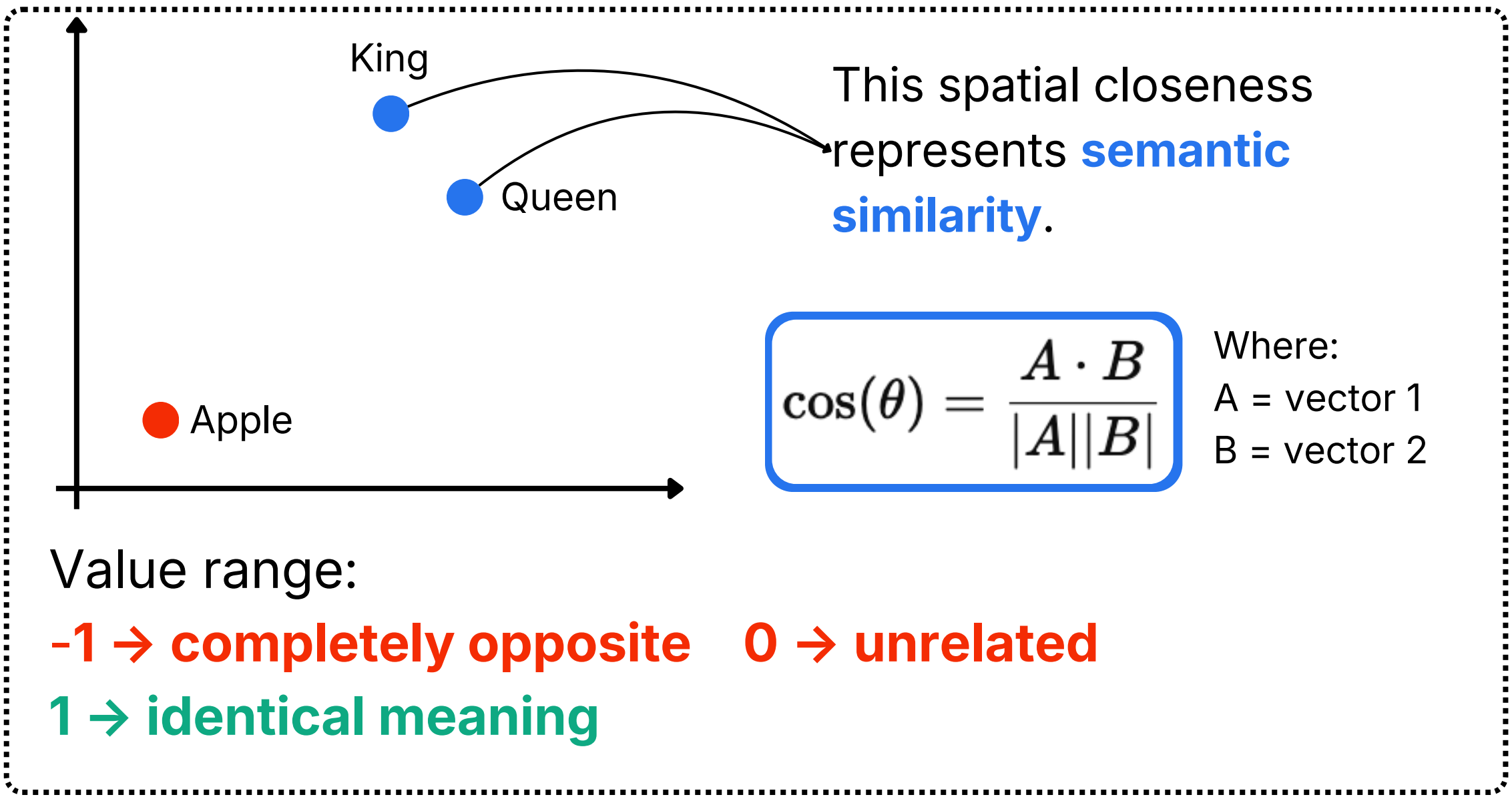

Why Embeddings came into picture?

Traditional computers understand:

- numbers
- exact matches
- structured data

They do NOT understand meaning.

Query → How to learn AI

Document → Artificial Intelligence tutorial for beginners

Keyword matching struggles because:

learn ≠ tutorial
AI ≠ Artificial Intelligence

But humans know they mean the same thing.

This gap between human meaning and machine understanding led to **embeddings**.

What are Embeddings

In Simple Language, embeddings convert meaning into numbers. Now machines can compare meaning mathematically.

In technical terms, embeddings are **numerical vector representations** of data that preserve **semantic meaning**.

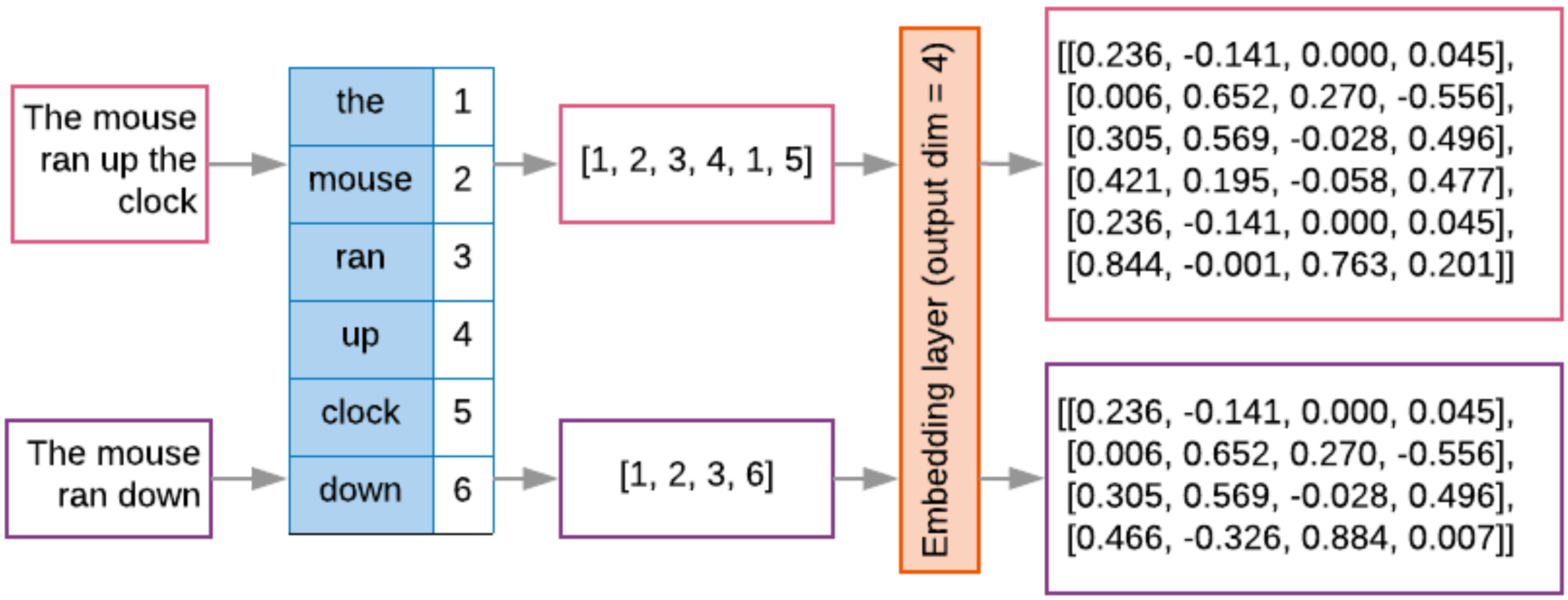

Let's take an example to understand embeddings.

Words	Vectors
King	[0.9, 0.8, 0.2]
Queen	[0.88, 0.79, 0.25]
Apple	[0.1, 0.2, 0.9]

Each number represents a learned feature.

These features are not human-readable labels. Instead, they capture abstract patterns learned during training.

Meaning Comes from Context During Training

Embedding models learn by reading massive text datasets.

Example sentences:

- The king ruled the kingdom
- The queen ruled the kingdom
- The king and queen are royalty

From this, the model learns:

- King and Queen appear in **similar contexts**.

So their **vectors become similar**.

Apple appears in **different contexts**:
Apple is a fruit. So its **vector** becomes different.

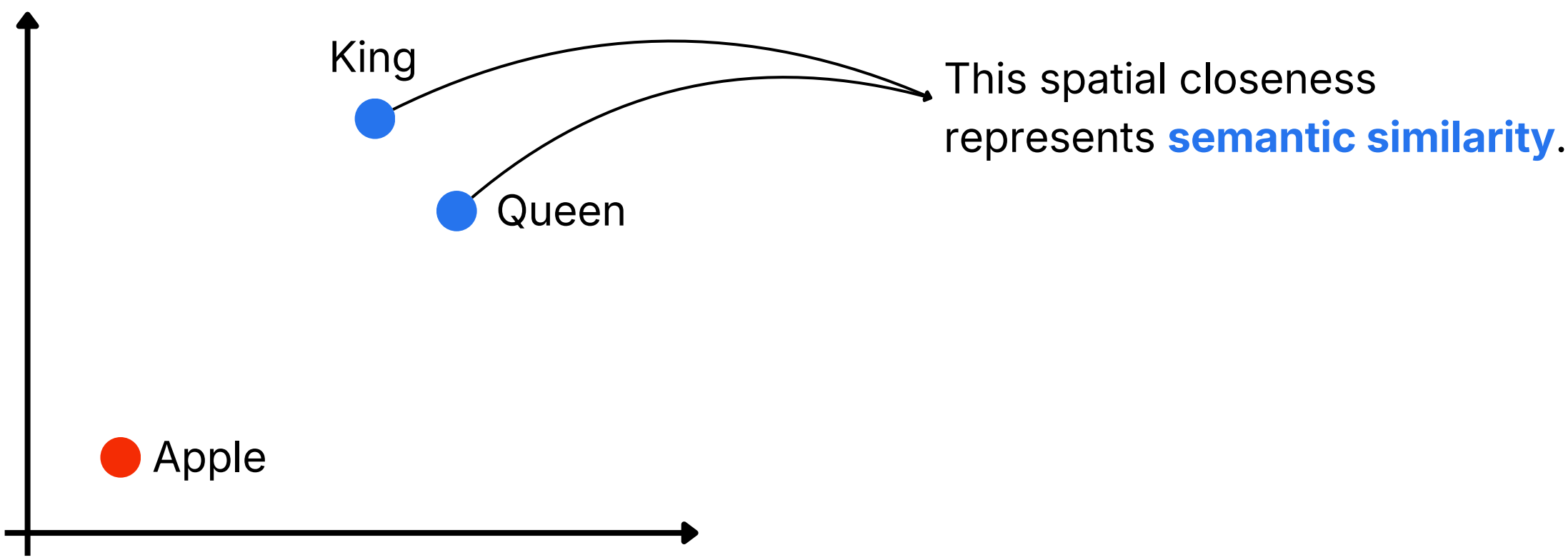

Cosine Similarity Measures Meaning Similarity

Cosine similarity measures the angle between vectors.

$$\cos(\theta) = \frac{A \cdot B}{|A||B|}$$

Where:
A = vector 1
B = vector 2

Value range:

-1 → completely opposite
0 → unrelated
1 → identical meaning

King = [0.9, 0.8, 0.2]
Queen = [0.88, 0.79, 0.25]
Apple = [0.1, 0.2, 0.9]

Cosine Similarity: King vs Queen

Step 1: Dot product King·Queen

$(0.9 \times 0.88) + (0.8 \times 0.79) + (0.2 \times 0.25)$

Compute each term:

- 0.9×0.88=0.792
- 0.8×0.79=0.632
- 0.2×0.25=0.05

Add them:

0.792+0.632+0.05=1.474

King·Queen=1.474

Step 2: Magnitude of ||King||

$$\sqrt{0.9^2 + 0.8^2 + 0.2^2} = \sqrt{0.81 + 0.64 + 0.04} = \sqrt{1.49} \approx 1.2206556$$

Step 3: Magnitude of ||Queen||

$$\sqrt{0.88^2 + 0.79^2 + 0.25^2} = \sqrt{0.7744 + 0.6241 + 0.0625} = \sqrt{1.461} \approx 1.2087183$$

Step 4: Cosine Similarity

$$\frac{1.474}{(1.2206556)(1.2087183)} = \frac{1.474}{1.4754287} \approx 0.9990316$$

✅ Cosine(King, Queen) ≈ 0.9990 (extremely similar)

Using this style, you can compute the cosine similarity of King vs Apple, Queen vs Apple

Why Cosine Similarity Works So Well

Cosine similarity focuses on direction, not magnitude.

This is important because:
Magnitude = intensity
Direction = meaning

Two vectors pointing in same direction represent similar meaning. Even if lengths differ.

Now the question is, how do you convert normal text into vectors?

You can use some Pre-trained Embedding Models like OpenAI Text Embedding 3 Large, Qwen3 Embedding 8B, BGE-M3 and many more.

These models are typically used to transform documents or document chunks into embedding vectors, enabling machines to represent their meaning numerically. This makes them especially valuable for semantic search and RAG systems.